V2X Functional Module

SOM-352EC

C-V2X mPCIe System-On-Module, V2Xcast® - Europe ETSI C-V2X stack

SOM-352ED

DSRC-V2X mPCIe System-On-Module, V2Xcast® - Europe ETSI ITS-G5 stack

SOM-352UC

C-V2X mPCIe System-On-Module, V2Xcast® - US C-V2X stack

SOM-352UD

DSRC-V2X mPCIe System-On-Module, V2Xcast® - US DSRC/IEEE 1609 stack

SOM-352 is a complete V2X function sub-system. With an embedded V2Xcast® (V2X stack and SDK) in mPCIe, its design can effortlessly embedded into any existing vehicle/industrial PC, or communication platform, and easily perform secondary software development to enable V2X or V2X-sensor fusion applications for commercial vehicles, intelligent transportation, and smart road traffic applications.

Global V2X supported, SOM-352 can flexibly shift between DSRC-V2X or C-V2X with one V2X stack (US IEEE 1609/J2735 or Europe ITS-G5 V2X protocol standard) through re-flashing firmware, reducing the cost and complexity for global deployment. Consistent V2Xcast® API preserves all the value of software add-ons for any future technology change or protocol standard update.

With embedded C-ITS or ITS-G5 or IEEE 1609 stack/SAE J2735 Messages and ready-to-use V2X service profiles, users can directly configure the profiles to compose J2735 or ITS Messages per service requirements, and develop V2X applications without the hassle of handling or setting the V2X protocol details from scratch.

Advanced GNSS functions include Dead Reckoning with integrated IMU, update rate over 20Hz GNSS and multiple concurrent constellations; these provide better positioning accuracy, time synchronization, and lane-leveled position accuracy for smoother vehicle trajectory on urban roads.

- Complete V2X system in small 50.95 x 38.5 mm product size with standard mPCIe pin-definition, containing CRATON2/PLUTON2 V2X chipsets, GNSS, eHSM, 256MB DDR3 RAM, 512MB NAND, and V2Xcast® software.
- A rich V2Xcast® firmware containing:
  - Standard compliant V2X stacks.
  - User friendly APIs for Service, Tx/Rx, PoTi, J2735 or ITS-G5 compliant Messages encode/code.
  - Application example codes, including Event Detector to detect remote vehicle and roadside events, Traffic Signal Detector to detect current position's signal phase, RTK Sample Application to improve GNSS accuracy.
- Dead Reckoning with integrated IMU, update rate over 20Hz GNSS and multiple concurrent constellations provide better positioning accuracy and time synchronization for V2X applications.
- Secured V2X communication supports SCMS or CCMS including the V2X PKI certificate management and the private key operation on the embedded Hardware Security Module (eHSM).
- In addition to standard mPCIe connection, an additional external Molex 7-pin onboard connector can be used as a supplement to support the inputs which is not supported directly from the host mPCIe slot.
- Antenna detection and diagnose supported.
- Support DFU mode using command from the host platform to update the SOM firmware.
- Wide-ranged -40°C ~ +85°C operating temperature complies with industrial application requirements.
- Software-defined design lets the SOM flexibly shift between DSRC-V2X or C-V2X with one V2X stack (IEEE 1609 or ITS-G5 V2X standard) through re-flashing firmware.
- Lowest entry and total ownership cost: ready-to-be-used V2X sub-system with bundle license right to use V2Xcast® software on the hardware (per MAC address) and SDK at one fixed price, no extra license fee or royalty required.

System Block Diagram

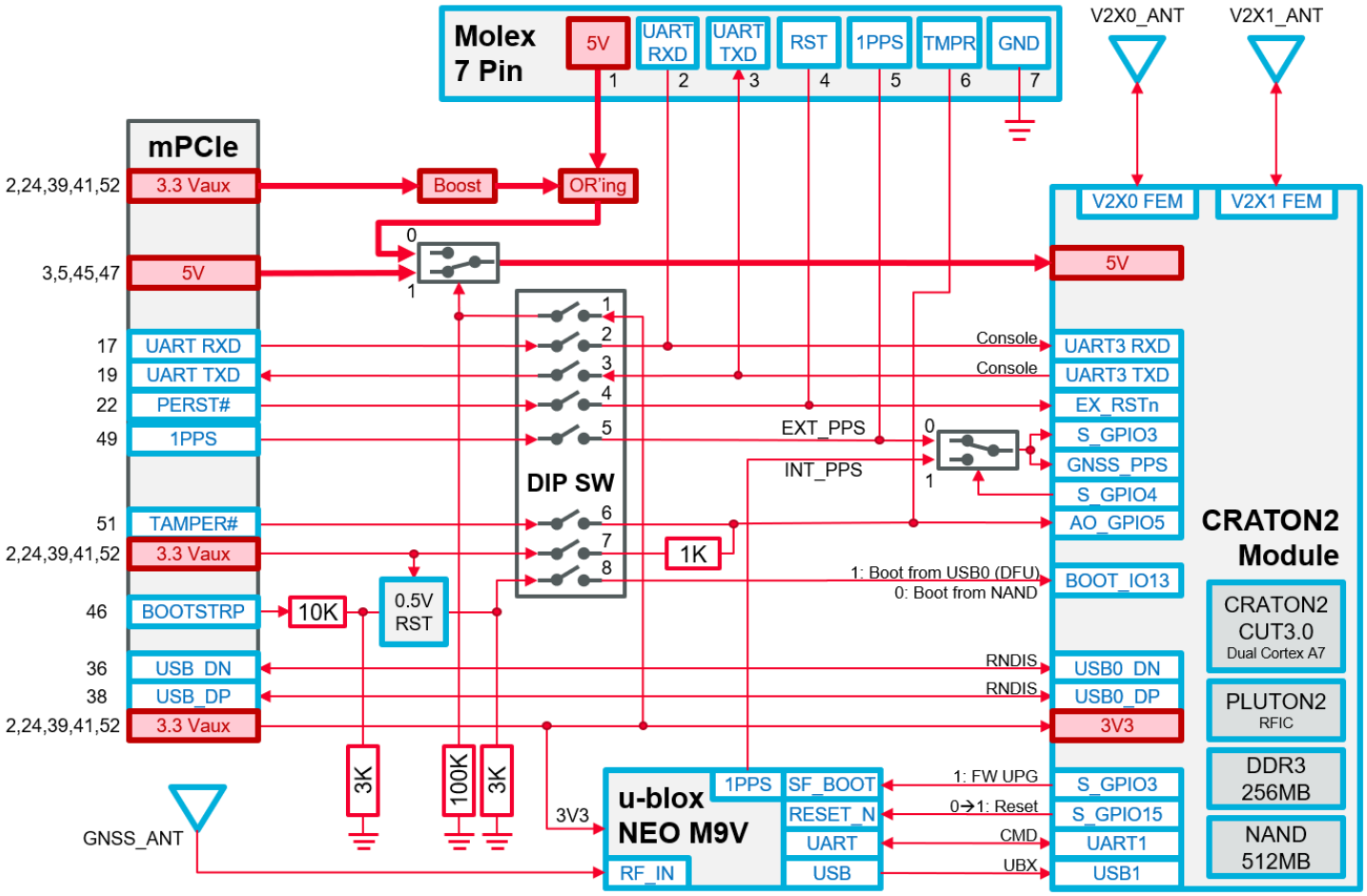

Computing Host Platform Requirements

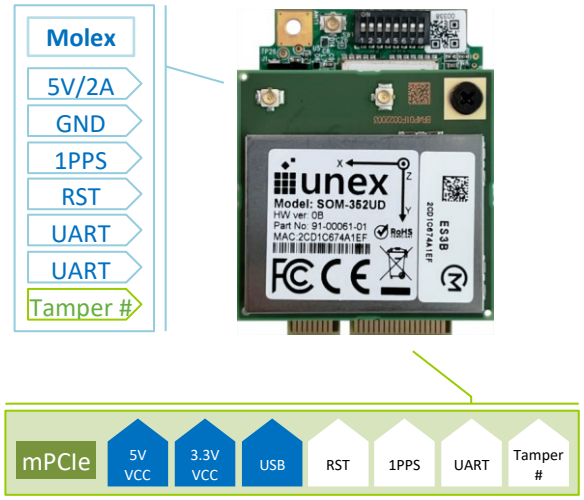

mandatory inputs: 3.3V and USB; recommended input: 5V

non-mandatory inputs.

external Molex connector as alternatives.

Host platform system requirements:

1. OS: Linux v4.x or above.
2. Library: ARM v8 64-bit or ARM v7a 32-bit or x86 64-bit.
3. USB host mode.
4. RNDIS to support Ethernet over USB, no driver porting required.
5. One free mPCIe slot

Power supply requirements:

In addition to 3.3V power & USB inputs from standard mPCIe pins, supply DC 5V/2A power either to mPCIe or to Molex is recommended.

Note: Typical power consumption is 4W.

V2Xcast® Firmware

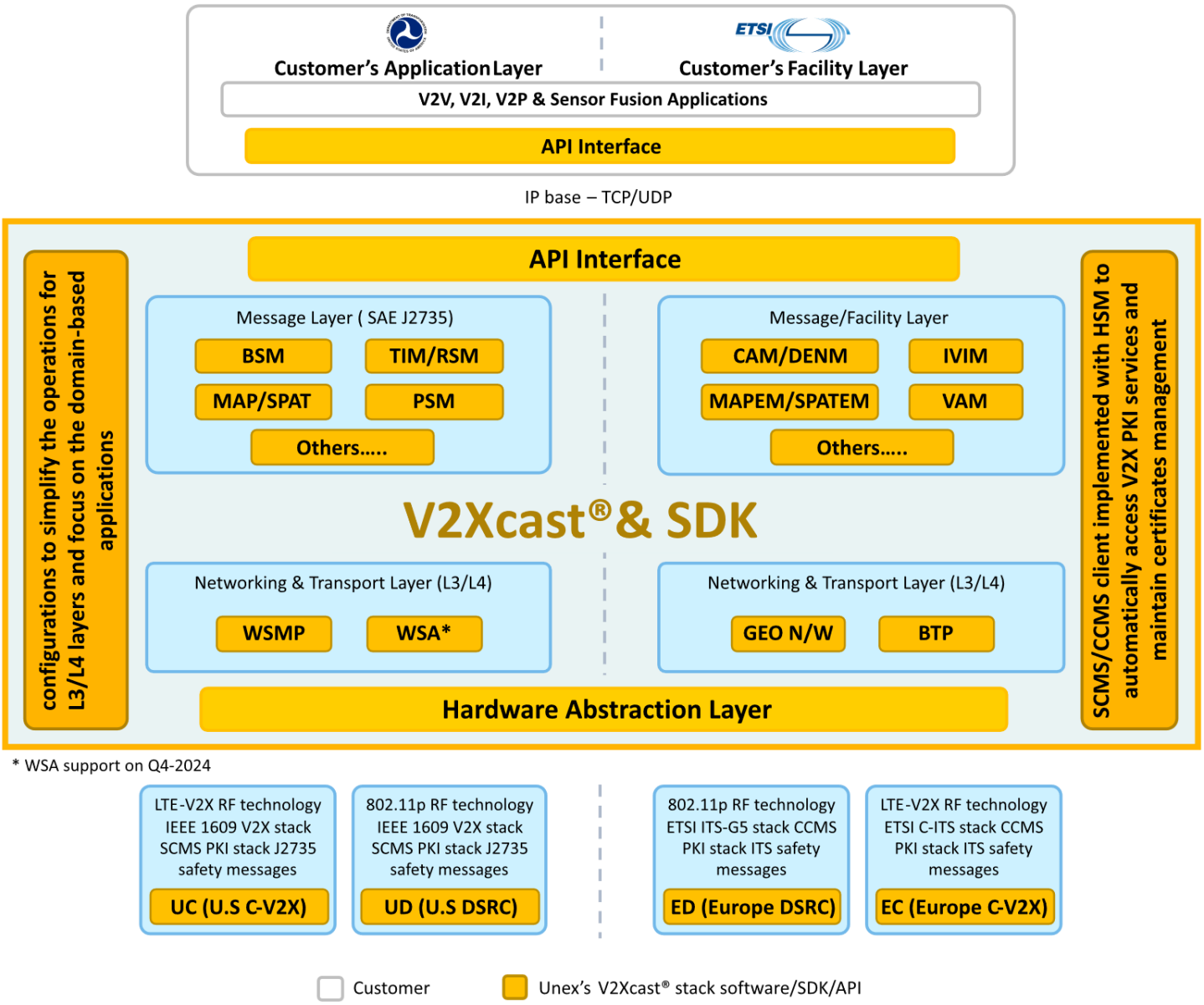

* WSA support on Q4-2024

Customer Unex's V2Xcast® stack software/SDK/API

Global V2X solution in mPCIe form

Innovative software-defined design lowers the total ownership cost in field application, the same SOM can flexibly shift between DSRC-V2X or C-V2X with one V2X stack (IEEE 1609 or ITS-G5 V2X standard) through local/remote firmware re-flashing.

Remarks: For shifting requirements from DSRC-V2X to C-V2X on the same MAC address (vice-versa) V2X hardware, extra license fee would be required.

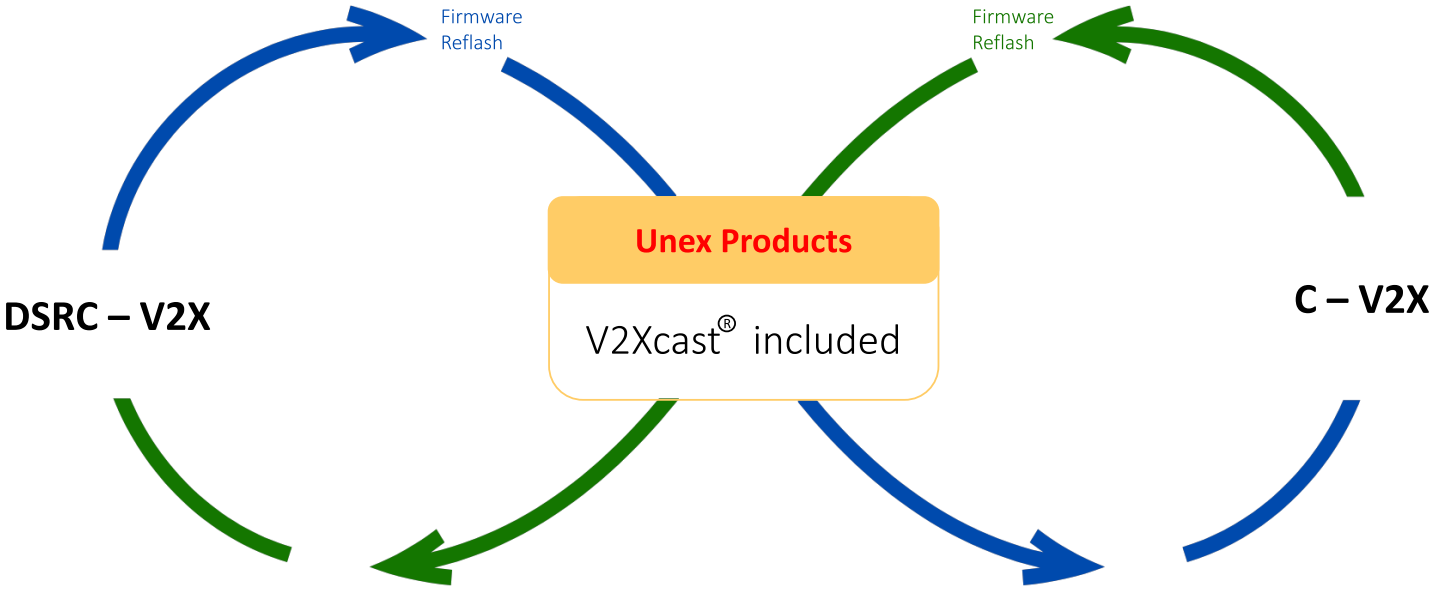

Specifications

Chipset

- Autotalks® CRATON2 V2X communication processor
- Autotalks® PLUTON2 V2X RF Transceiver
- Embedded Hardware Secure Module (eHSM)
- u-blox® NEO-M9V GNSS module

Operation System

Linux Yocto

Form Factor

PCI Express Mini Card (Mini PCIe), 51.0 mm x 38.5 mm PCBA size, 8.5 mm wider than the standard

Host Interface

USB 2.0 (480 Mbits/s)

System Memory

512MB NAND, 256MB DDR3

Preloaded Firmware

- SOM-352EC: V2Xcast® ETSI C-ITS stack including LTE-V2X (PC5), CAM/DENM, GN/BTP, Security, PoTi,
- SOM-352ED: V2Xcast® ETSI ITS-G5 stack including IEEE802.11p, Facility Message, GN/BTP, DCC, Security, PoTi
- SOM-352UC: V2Xcast® IEEE1609 stack /SAE J2735 Message for C-V2X including 1609.2, 1609.3, IEEE1609.2.1, SAE J2735, PoTi
- SOM-352UD: V2Xcast® IEEE1609 stack /SAE J2735 Message for 802.11p WAVE including 1609.2, 1609.3, 1609.4, IEEE1609.2.1, SAE J2735, PoTi

Development Tool

V2Xcast® SDK, including Service, Tx/Rx, PoTi, J2735 or ITS-G5 compliant Message APIs and application example codes

Hardware Security

- Dedicated ROM containing certified secure V2X signing firmware
- Secure encrypted off-chip storage of private keys
- Private material is inaccessible outside HSM
- Capable of >110 signatures / second, with <9ms signing latency for ECDSA NIST P256 or ECDSA Brain pool P256R1
- Line-rate ECDSA verification engine (>2500 ECDSA NIST P256 verifications / second)
- Tamper detection*

(*. Support by project)

V2X

- Supported Frequency band: 5.895 ~ 5.925 GHz
- DSRC-V2X Radio mode: 802.11p
- C-V2X Radio mode: 3GPP LTE-V2X Rel.14/15 PC5 sidelink
- RF transmit power: max. +20dBm on antenna port, Class C RF spectrum mask compliant with margins
- RF receive power: typ. < -92dBm

Remarks: For legacy DSRC WAVE applications, 1). channel switch in 1609.4, and 2). WSA broadcast for ETC are not supported.

GNSS

- Update rate: max. 20Hz
- Sensitivity:
  - Acquisition: -146dBm
  - Navigation: -159dBm
  - Tracking: -159dBm
- NMEA Standard: NMEA 0183
- Accuracy: sub-meter (CEP50 with SBAS)
- Constellation support: GPS L1, GLONASS L1, Galileo E1, Beidou B1, and QZSS L1.
- SBAS L1 C/A support: WAAS (US), EGNOS (EU), MSAS/SLAS (JP), and GAGAN (IN).

Power Consumption

typical 2Watt~4Watt

On-board Interface

- Mandatory mini PCIe interfaces used:
  - USB 2.0 (480Mbits/s)
  - 3.3V mini PCIe power input
  - 5V power input (proprietary)
- RF interfaces:
  - two MHF I RF connectors (V2X)
  - one MHF I RF connector (GNSS)
- Optional Proprietary interface:
  - one UART, one 1PPS, one Reset, one Tamper on mPCIe
  - one external Molex connector as mPCIe inputs back-up

ESD design

ESD protects all ports in ESD events. (IEC 61000- 4-2 Level 4, Contact ±8kV, Air ±15kV)

Operation Temperature Transmission Distance

- ambient: -40°C ~ +85°C
- typical 300 meters, may reach 1,000 meter in open space

OmniAir® Certification

SOM352UC conforms and awarded OmniAir's LTE-V2X (PC5) R1.0 certification complying to test specifications 759::761 (3GPP 36521), 762 (SAE J3161_1), 763 (IEEE 1609.2) and 765 (IEEE 1609.3). See OmniAir's website (www.omniair.org) for details.

EMC RF Regulation

CE (Q1-2025), FCC Class B (after FCC validation), CISPR25 Class 5 (Q1/2025)

Storage Humidity

max. 95%, non-conde

Dimension

50.95 mm(L) x 38.5 mm(W) x 11.7 mm (H)

mPCIe Pin Supported and Definition:

Row	Pin	Symbol	Type	Description	Status
0	3	5V	P	5V/2A Power Input (originally reserved)	Proprietary
0	5	5V	P	5V/2A Power Input (originally reserved)	Proprietary
0	9	GND	G		
0	15	GND	G		
0	-	KEY	-	Mechanical Key	
0	17	UART_RX	I	UART receive data input (originally reserved)	Proprietary
0	19	UART_TX	O	UART transmit data output (originally reserved)	Proprietary
0	21	GND	G		
0	27	GND	G		
0	29	GND	G		
0	35	GND	G		
0	37	GND	G		
0	39	3.3 Vaux	P	Max 115mA	
0	41	3.3 Vaux	P	Max 115mA	
0	43	GND	G		
0	45	5V	P	5V/2A Power Input (originally reserved)	Proprietary
0	47	5V	P	5V/2A Power Input (originally reserved)	Proprietary
0	49	1PPS	I	GNSS 1 pulse per second input (active HIGH, originally reserved)	Proprietary
0	51	TAMPER#	I	Tamper detection (active LOW)	Proprietary
1	2	3.3 Vaux	P	Max 115mA	
1	4	GND	G		
1	-	KEY	-	Mechanical Key	
1	18	GND	G		
1	22	PERST#	I	Module Reset (Internally pulled up. Active LOW, pulse)	
1	24	3.3Vaux	P	Max 115mA	
1	26	GND	G		
1	34	GND	G		
1	36	USB_D-	I/O	USB 2.0 differential data (-)	
1	38	USB_D+	I/O	USB 2.0 differential data (+)	
1	40	GND	G		
1	46	BOOTSTRP	I	DFU mode	Proprietary
1	50	GND	G		
1	52	3.3 Vaux	P	Max 115mA	

Molex on-board connector

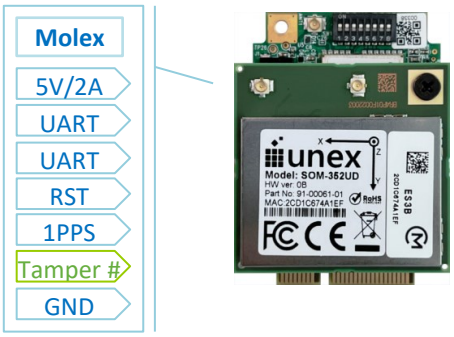

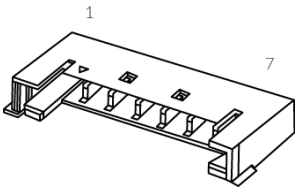

Function	Pin	Name	Type	Level	Description
Power	1	5V	P	5	5V power
UART	2	RXD	I	3.3	UART RXD
	3	TXD	O	3.3	UART TXD
Reset	4	EX_RSTn	I	3.3	CRATON2 (active LOW) Min assertion time: 10ms
1PPS	5	1PPS	I	3.3	1PPS
Tamper	6	TAMPER#	I	3.3	Tamper switch signal (active LOW)
Ground	7	GND	G		Ground

Product SKU and Ordering Information

SOM-352EC

C-V2X mPCIe System-On-Module, V2Xcast® - Europe ETSI C-V2X stack

SOM-352ED

DSRC-V2X mPCIe System-On-Module, V2Xcast® - Europe ETSI ITS-G5 stack

SOM-352UC

C-V2X mPCIe System-On-Module, V2Xcast® - US C-V2X stack

SOM-352UD

DSRC-V2X mPCIe System-On-Module, V2Xcast® - US DSRC/IEEE 1609 stack

SOM-352EC/SOM-352ED/SOM-352UC/SOM-352UD Package contents

- One SOM with pre-loaded V2X stack & firmware (C-V2X or DSRC-V2X technology with one ITS-G5 or IEEE 1609 stack/SAE J2735 Messages).
- Hardware / Software User's Guide and V2Xcast® SDK download email link after shipping.

Optional Accessory for initial software porting

EX-31: active GPS antenna	EX-55: V2X antenna	80-00043: MHF-FAKRA cable

Unex Technology Corporation

https://unex.com.tw

info@unex.com.tw

886-3-6578188