D140

14" Windows Rugged Tablet PC with Intel® Core™ i5-1235U

Contact Sales

KEY FEATURES

- Intel® Core™ i5-1235U Alder Lake processor
- 14-inch tablet, 1920 x 1080 wide viewing angle LED Panel
- Projected Capacitive Touch screen with Stylus
- Magnesium Alloy Housing with All-Around Elastomeric Rubber
- Thermal Design with Fan cooling system
- Built in stylus holder for left/right hand usage

INTRODUCTION

Winmate D140 Rugged Tablet Series combines durability, performance, and versatility to meet the needs of demanding industrial applications. Featuring a 14-inch Full HD display, it delivers clear visuals ideal for GIS, mapping, and CAD tasks. Powered by a 12th Gen Intel® Core™ i5-1235U processor, it ensures seamless multitasking and efficient energy use for field operations. The tablet's projected capacitive touch supports multi-touch and glove compatibility, while the cooling fan design and IP65 rating enable reliable operation in harsh conditions. With features like an 8MP rear camera, Wi-Fi, 4G, multiple USB ports, and quick-access function keys, the D140 is perfect for fieldwork, inspections, and remote communication.

OVERVIEW

Powered by High-Performance Intel® Processor

Winmate D140 is equipped with the Intel® Core™ 12th Gen processor, offering cutting-edge performance for multitasking and running data-intensive industrial applications. Its energy-efficient design ensures smooth operation, making it ideal for automotive logistics, and field service environments.

Seamless Interaction with Full HD Display and Advanced Features

Designed with usability in mind, the D140 features a 14-inch Full HD touchscreen with projected capacitive touch technology (PCAP), delivering precise, responsive interaction, even when wearing gloves. Whether you're annotating designs or analyzing data, the included stylus pen provides exceptional precision for every task.

Rugged Durability with IP65 Protection

With an IP65-rated waterproof and dustproof build, the Winmate D140 excels in extreme conditions. Its rugged durability, combined with a cooling fan design for temperature stability, ensures reliable performance in harsh industrial or outdoor settings.

Flexible Connectivity with Rotatable I/O Doors

Winmate D140's innovative rotatable I/O doors provide easy access to its multiple ports, including 4 USB Type-A, 2 USB Type-C (PD & ALT mode), and a LAN port. These doors rotate out of the way during use but stay closed to protect the ports when not in use, ensuring seamless, secure connectivity for industrial peripherals and accessories.

Perfect for Field Operations with Long Battery Life

Optimized for field use, Winmate D140 combines functionality with endurance. Its six customizable function keys provide quick access to essential tools, while the battery ensures long hours of uninterrupted operation. The included stylus pen enhances precision input, making it the ultimate solution for mobile professionals in industries like logistics, utilities, and public safety.

SPECIFICATIONS

Display			
Bonding	Optical Bonding for Sunlight Viewability	**Resolution**	1920x1080
Size	14.0 inches	**Contrast Ratio**	1000:1
Panel Brightness	500.0 nits	**View Angles**	89,89,89,89
Type	Projected Capacitive Multi Touch		
System Specification			
Processor	12th Intel® Core™ i5-1235U, 3.3GHz, max 4.4GHz	**Memory**	1 x 8GB SODIMM DDR5-4800 (up to 32GB)
Storage	256GB M.2 NVMe SSD 512GB M.2 NVMe SSD (Optional) 1TB M.2 NVMe SSD (Optional) 2TB M.2 NVMe SSD (Optional)	**Security**	Trusted Platform Module (TPM) 2.0 Kensington Lock
Operating System	Windows 11 IoT Enterprise LTSC (64 bit)	**WLAN**	Support
BT	Support	**WWAN**	4G LTE (Optional)
Mechanical			
Dimension	355.55 x 250.71 x 32.1 mm	**Weight**	2.4 Kg (Without Kickstand), 2.5 Kg (With Kickstand)
Cooling System	Fan Design		
IO Ports			
USB Port	4 x USB 3.2 Type A, 2 x USB 3.0 Type C (PD/ALT Mode)	**Audio**	2 x 1 watt speaker
LAN	1 x RJ45 10/100/1000 Mbps LAN	**Indicator**	4x LED Indicator for Power, Battery, WiFi, LTE
Environment			
Operating Humidity	30% to 80% RH, noncondensing	**Operating Temperature**	-10°C to 50°C (14°F to 122°F)
Storage Temperature	-20°C to 60°C (4°F to 140°F)	**Shock**	MIL-STD-810G Method 516.6 Procedure I
Vibration	MIL-STD-810G Method 514.6 Procedure I	**IP rating**	IP65
Drop	MIL-STD-810G Method 516.6, 4 ft	**EMC**	8KV/12KV (contact, Air)
Certification			
Certification	CE, FCC		
Security Function			
SOTI MobiControl	SOTI MobiControl Compliance	**Kensington Lock**	Kensington Lock Support
Control			
Button	1 x Power, 1 x F1, 1 x F2, 1 x Key Lock, 1 x Keyboard, 1 x Home key		
Power			
Battery	10.9V, typ. 6700 mAh, 73.03Wh LiOn Battery (3S2P)	**Power Rating**	19V DC
Adapter	100-240V, 50-60Hz / 19V DC / Type-C		
Accessory			

Accessory	Adapter and Power Cord
Rear Camera	8MP Rear Camera with autofocus and LED light (Optional)

DIMENSIONS UNIT:MM

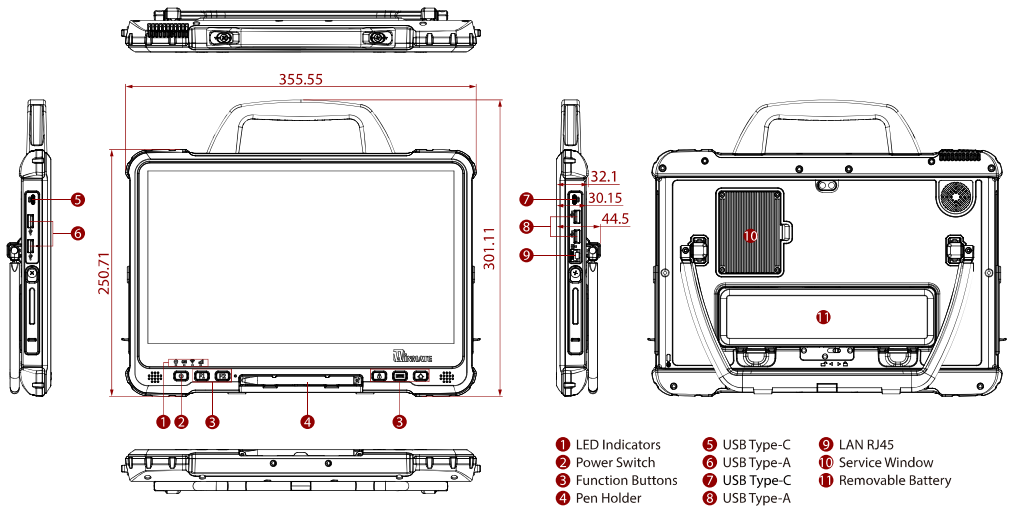

NOTE

1.This is a simplified drawing and some components are not marked in detail.
2.Please contact our sales representative if you need further product information.
3.All specifications are subject to change without prior notice.
4.The product shown in this datasheet is a standard model.For diagrams that contain customized or optional I/ O, please contact the Winmate Sales Team for more information.